1 Allée des Bouleaux -F-95110 SANNOIS
+33 (0)1 39 98 55 00
info@restagraf.com

STANDARD ALUMINIUM RIVET Ø 4 X 12 mm

Item code	Number of References	Number of pieces	Conditioning
4037	1	91	BAG
4038	1	500	BOX

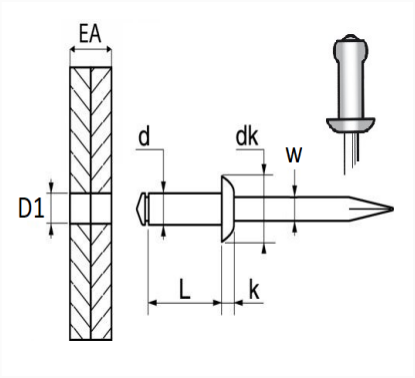

Technical informations	
d	4 mm
L	12 mm
dk	8 mm
k	1.3 mm
w	2.15 mm
EA	6 → 8 mm
D1	4.2 mm

Materials
ALUMINIUM ALLOY / STEEL STEM

Manufacturer correspondence*			
PEUGEOT / CITROËN	697041	PEUGEOT / CITROËN	697315

* Non contractual information given as indication