1 Allée des Bouleaux -F-95110 SANNOIS
+33 (0)1 39 98 55 00
info@restagraf.com

STANDARD ALUMINIUM RIVET Ø 3 X 4 mm



Item code	Number of References	Number of pieces	Conditioning
4001	1	149	BAG

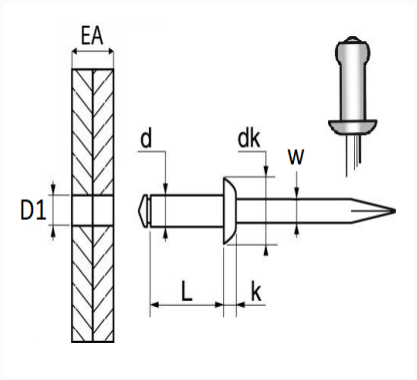

Technical informations	
d	3 mm
L	4 mm
dk	6 mm
k	1 mm
w	1.66 mm
EA	0.5 → 1.5 mm
D1	3.2 mm

Materials
ALUMINIUM ALLOY / STEEL STEM