Restagraf
1 Allée des Bouleaux -F-95110 SANNOIS
+33 (0)1 39 98 55 00
info@restagraf.com

# KLEMMOER Ø 4,2 mm



| Item code | Number of References | Number of pieces | Conditioning |
|---|---|---|---|
| 347 | 1 | 25 | |
| 42727 | 1 | 100 | |

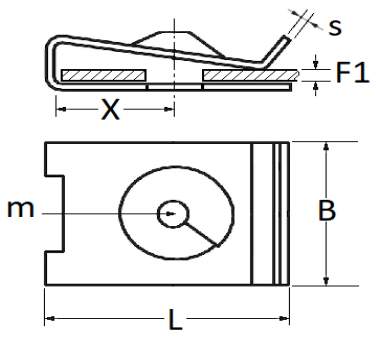


| Technical informations | |
|---|---|
| L | 16 mm |
| B | 12 mm |
| X | 8.5 mm |
| s | 0.6 mm |
| F1 | 0.6 → 1.4 mm |
| m | Vis à Tôle Ø 4.2 mm |
| | |
| | |
| | |
| | |

| Materials |
|---|
| STAAL XC68 |

| Manufacturer correspondence* | | | |
|---|---|---|---|
| ALFA ROMEO | 143722790 | ALFA ROMEO | 853850200 |
| | | | |

| Manufacturer correspondence* | | | |
|---|---|---|---|
| FIAT | 143722790 | FIAT | 853850200 |
| RENAULT | 0853850200 | | |

* Non contractual information given as indication