1 Allée des Bouleaux -F-95110 SANNOIS
+33 (0)1 39 98 55 00
info@restagraf.com

METAL / PLASTIC TUBULAR CLIP Ø 16 mm DOOR GUSSET

Item code	Number of References	Number of pieces	Conditioning
11480	1	6	BAG

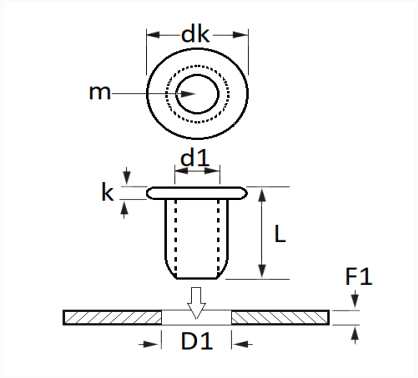

Technical informations	
dk	22 mm
k	3 mm
L	8.5 mm
d1	10 mm
m	Axe Ø 14 mm
D1	16 mm
F1	0.7 → 1.7 mm

Materials
TPE & STEEL

Manufacturer correspondence*			
SEAT	6Q0837975	SKODA	6Q0837975

Manufacturer correspondence*	
VOLKSWAGEN	6Q0837975

* Non contractual information given as indication