1 Allée des Bouleaux -F-95110 SANNOIS
+33 (0)1 39 98 55 00
info@restagraf.com

WARMTEKRIMPBARE PERSMOF 0,5 → 1,5 mm²

Item code	Number of References	Number of pieces	Conditioning
306647	1	50	
6647	1	10	
226647	1	5	

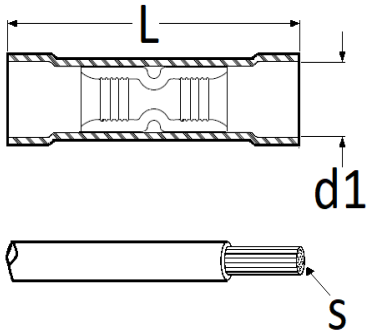

Technical informations	
L	36 mm
d1	4 mm
s	0.5 → 1.5 mm²

Materials
VERTIND KOPER