Restagraf
1 Allée des Bouleaux -F-95110 SANNOIS
+33 (0)1 39 98 55 00
info@restagraf.com

METALEN KOOIMOER M4-0.70



Item code	Number of References	Number of pieces	Conditioning
328	1	20	

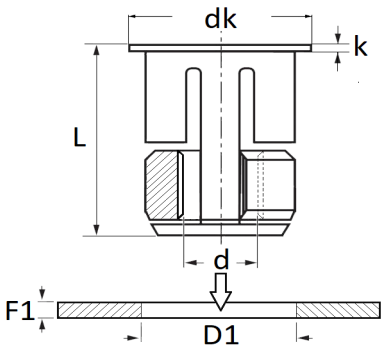

Technical informations	
dk	11 mm
k	0.6 mm
L	13 mm
d	M4 x 0.70
D1	10.1 mm
F1	0.7 → 3 mm

Materials
STAAL

Manufacturer correspondence*	
PEUGEOT / CITROËN	694107

* Non contractual information given as indication