1 Allée des Bouleaux -F-95110 SANNOIS
+33 (0)1 39 98 55 00
info@restagraf.com

AXIALSICHERUNG Ø 5 mm FÜR MOTORSCHUTZHAUBE

Item code	Number of References	Number of pieces	Conditioning
228113	1	4	BLISTER
11550	1	12	BEUTEL
42660	1	100	BEHÄLTER

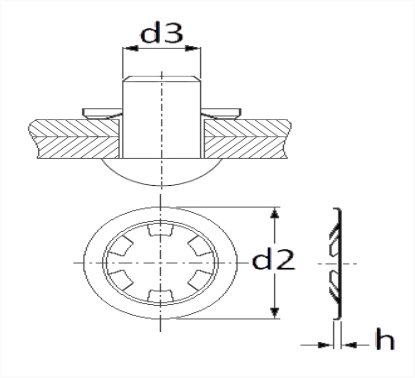

Technical informations	
d3	5 mm
d2	30 mm
h	3 mm

Materials
STAHL

Manufacturer correspondence*			
RENAULT SAMSUNG MOTORS	248610	VOLKSWAGEN	N90335004

Manufacturer correspondence*	
VOLKSWAGEN	N90335006

* Non contractual information given as indication