1 Allée des Bouleaux -F-95110 SANNOIS
+33 (0)1 39 98 55 00
info@restagraf.com

HOOD LOCK CLIP

Item code	Number of References	Number of pieces	Conditioning
228211	1	1	BLISTER

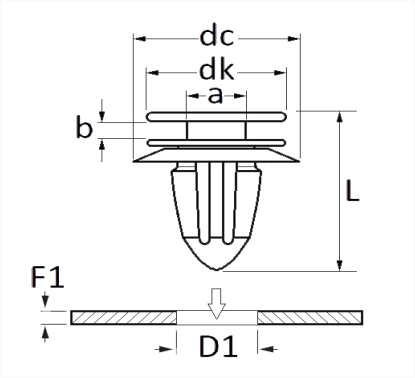

Technical informations	
dk	19.8 mm
dc	18 mm
b	2.2 mm
L	17.41 mm
D1	8.1 mm
F1	0.7 → 1 mm

Materials
POLYAMIDE 66

Manufacturer correspondence*	
ALTERNATIVE TO RENAULT	8200069296

* Non contractual information given as indication