1 Allée des Bouleaux -F-95110 SANNOIS
+33 (0)1 39 98 55 00
info@restagraf.com

PLASTIC NUT Ø 4,2 mm

Item code	Number of References	Number of pieces	Conditioning
228210	1	1	BLISTER

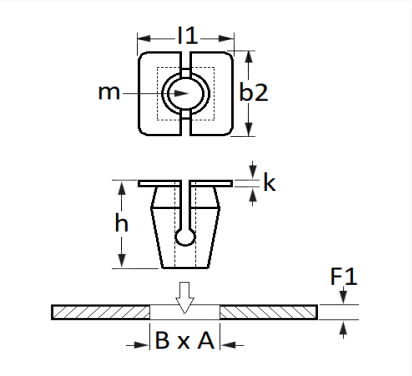

Technical informations	
l1	21.1 mm
b2	20.1 mm
k	0.8 mm
h	15.2 mm
m	Vis à Tôle Ø 4.2 mm
B	15.7 mm
A	18 mm
F1	0.7 mm

Materials
POLYAMIDE 6

Manufacturer correspondence*	
RENAULT	8200237892

* Non contractual information given as indication