1 Allée des Bouleaux -F-95110 SANNOIS
+33 (0)1 39 98 55 00
info@restagraf.com

PLASTIC RIVET Ø 7 mm

Item code	Number of References	Number of pieces	Conditioning
130373	1	10	BAG

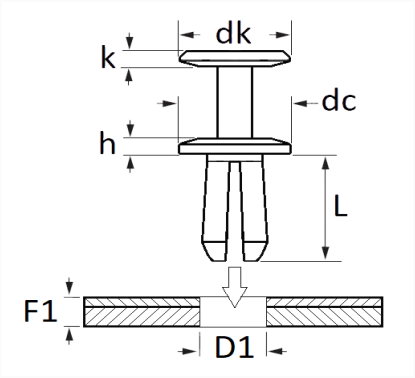

Technical informations	
dk	12 mm
k	3.8 mm
dc	20 mm
h	2.5 mm
L	17 mm
D1	7 mm
F1	2 → 6.5 mm

Materials
POLYAMIDE

Manufacturer correspondence*	
ALFA ROMEO	50552261

* Non contractual information given as indication