1 Allée des Bouleaux -F-95110 SANNOIS
+33 (0)1 39 98 55 00
info@restagraf.com

FLAT ALUMINIUM GASKET RING Ø 6 x 10 x 1 mm

Item code	Number of References	Number of pieces	Conditioning
7650	1	10	BAG

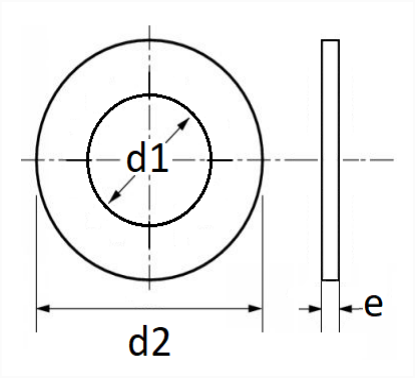

Technical informations	
d1	6 mm
d2	10 mm
e	1 mm

Materials
ALUMINUM