Restagraf
1 Allée des Bouleaux -F-95110 SANNOIS
+33 (0)1 39 98 55 00
info@restagraf.com

ANSCHLAG HAUBE



Item code	Number of References	Number of pieces	Conditioning
11686	1	2	BEUTEL

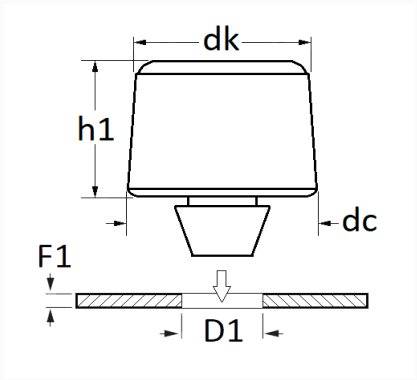

Technical informations	
dk	26.2 mm
dc	20 mm
h1	40 mm
D1	10.2 mm
F1	0.7 → 1 mm

Materials
ABS(ACRYLNITRILBUTADIENSTYROL)

Manufacturer correspondence*	
RENAULT	8200401454

* Non contractual information given as indication