1 Allée des Bouleaux -F-95110 SANNOIS
+33 (0)1 39 98 55 00
info@restagraf.com

VENTIEL AIRCOCIRCUIT M10 x 0.75 R134A (R134A / 1234yf GAS)

Item code	Number of References	Number of pieces	Conditioning
2186	1	10	

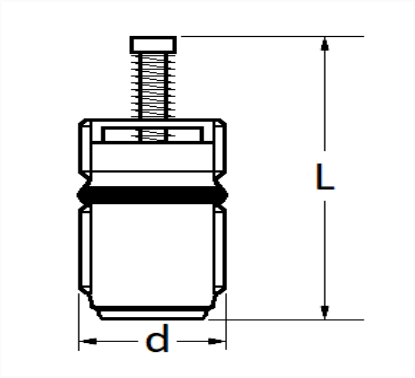

Technical informations	
L	21.8 mm
d	M10 x 0.75

Materials
MESSING