1 Allée des Bouleaux -F-95110 SANNOIS
+33 (0)1 39 98 55 00
info@restagraf.com

MOULDING CLIP Ø 8,2 mm

Item code	Number of References	Number of pieces	Conditioning
1531	1	8	BAG

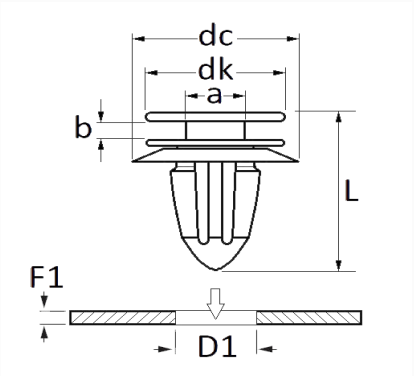

Technical informations	
dk	13.2 mm
dc	17 mm
b	2.1 mm
L	15 mm
D1	8.2 mm
F1	0.7 → 1.2 mm

Materials
POLYACETAL COPOLYMER

Manufacturer correspondence*			
AUDI	8U0853909	MERCEDES-BENZ	A0009910598

Manufacturer correspondence*			
ROVER	L560RL	VOLKSWAGEN	8U0853909

* Non contractual information given as indication