1 Allée des Bouleaux -F-95110 SANNOIS
+33 (0)1 39 98 55 00
info@restagraf.com

MOULDING CLIP Ø 8 mm

Item code	Number of References	Number of pieces	Conditioning
130357	1	10	BAG

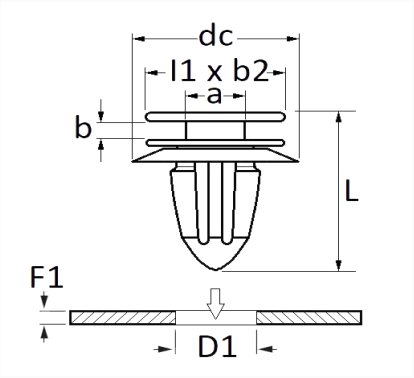

Technical informations	
l1	10 mm
b2	8 mm
dc	15 mm
b	1.3 mm
L	11.2 mm
D1	8 mm
F1	0.8 → 1.2 mm

Materials
POLYACETAL

Manufacturer correspondence*			
FORD Engineering number	W780227SJ100	LAND ROVER	LR038554

Manufacturer correspondence*			
LAND ROVER	W780227SJ00	SEAT	6F9853909
VOLKSWAGEN	6F9853909		

* Non contractual information given as indication