1 Allée des Bouleaux -F-95110 SANNOIS
+33 (0)1 39 98 55 00
info@restagraf.com

PLASTIC NUT Ø 4,5 mm

Item code	Number of References	Number of pieces	Conditioning
130321	1	10	BAG

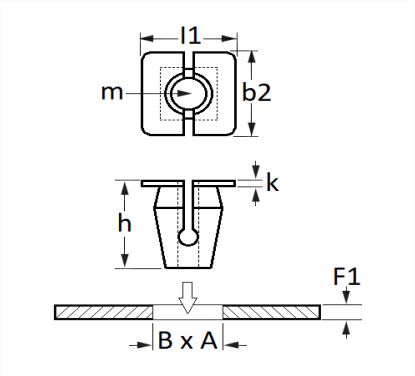

Technical informations	
l1	24.6 mm
b2	16.8 mm
k	3 mm
h	18.9 mm
m	Vis Matériaux Tendres Ø 4.5 mm
B	7.6 mm
A	10 mm
F1	0.7→1.5 mm

Materials
POLYAMIDE 6

Manufacturer correspondence*			
HYUNDAI	8775927000	KIA	8775927000

* Non contractual information given as indication