1 Allée des Bouleaux -F-95110 SANNOIS
+33 (0)1 39 98 55 00
info@restagraf.com

PLASTIC NUT M6

Item code	Number of References	Number of pieces	Conditioning
130302	1	10	BAG

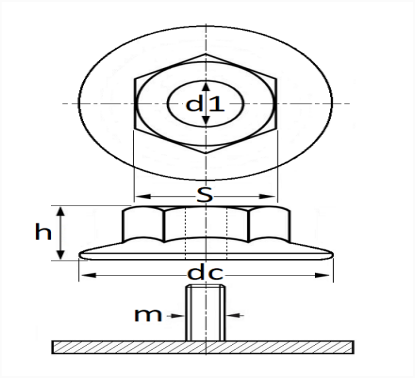

Technical informations	
dc	30.2 mm
h	10.2 mm
s	14 mm
m	Goujon M6

Materials
POLYAMIDE 6

Manufacturer correspondence*			
HYUNDAI	8414526000	KIA	8414526000

* Non contractual information given as indication