1 Allée des Bouleaux -F-95110 SANNOIS
+33 (0)1 39 98 55 00
info@restagraf.com

M5 x 0.75 AIR CONDITIONING VALVE CORE (R134A / 1234yf GAS)

Item code	Number of References	Number of pieces	Conditioning
2192	1	30	BAG

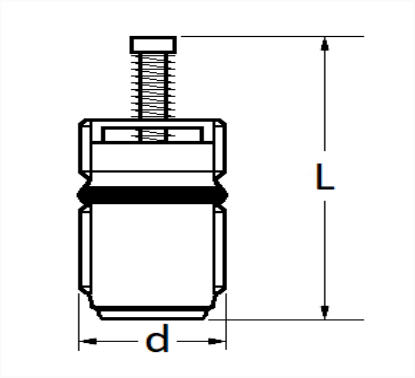

Technical informations	
L	18.5 mm
d	M5 x 0.75

Materials
BRASS

Manufacturer correspondence*			
CITROËN	1633559280	DS Automobiles	1633559280

Manufacturer correspondence*			
OPEL (Stellantis)	1633559280	PEUGEOT	1633559280

* Non contractual information given as indication