1 Allée des Bouleaux -F-95110 SANNOIS
+33 (0)1 39 98 55 00
info@restagraf.com

PANEL CLIP Ø 8,2 mm

Item code	Number of References	Number of pieces	Conditioning
10529	1	6	BAG

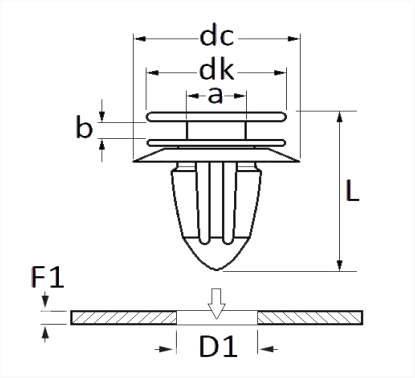

Technical informations	
dk	13.2 mm
dc	17.5 mm
b	2.2 mm
a	6 mm
L	25.7 mm
D1	8.2 mm
F1	0.7 →1.2 mm

Materials
POLYACETAL

Manufacturer correspondence*			
FORD Engineering number	W703613S300	FORD Engineering number	W713716S300

Manufacturer correspondence*			
FORD Finis	1070107	FORD Finis	5140935

* Non contractual information given as indication