1 Allée des Bouleaux -F-95110 SANNOIS
+33 (0)1 39 98 55 00
info@restagraf.com

# ENGINE INJECTOR SEAL Ø 7 x 12,8 x 1,5

| Item code | Number of References | Number of pieces | Conditioning |
|---|---|---|---|
| 7728 | 1 | 4 | BAG |

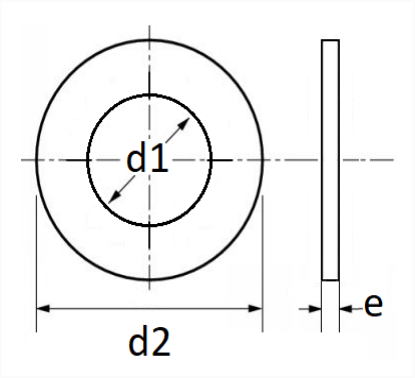


| Technical informations | |
|---|---|
| d1 | 7 mm |
| d2 | 12.8 mm |
| e | 1.5 mm |

| Materials |
|---|
| COPPER |

| Manufacturer correspondence* | | | |
|---|---|---|---|
| VOLVO | 12664576 | VOLVO | 31405753 |

* Non contractual information given as indication