1 Allée des Bouleaux -F-95110 SANNOIS
+33 (0)1 39 98 55 00
info@restagraf.com

ENGINE INJECTOR SEAL Ø 8 x 15,45 x 1,5

Item code	Number of References	Number of pieces	Conditioning
7723	1	4	BAG

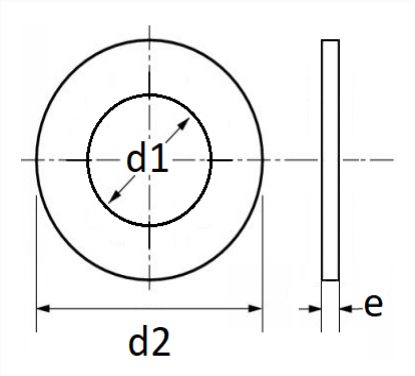

Technical informations	
d1	8 mm
d2	16.5 mm
e	1.5 mm

Materials
COPPER

Manufacturer correspondence*	
OPEL (GM) Catalog number	55567730

*Non contractual information given as indication