1 Allée des Bouleaux -F-95110 SANNOIS
+33 (0)1 39 98 55 00
info@restagraf.com

ENGINE INJECTOR SEAL Ø 7 x 12,3 x 2

Item code	Number of References	Number of pieces	Conditioning
7716	1	4	BAG

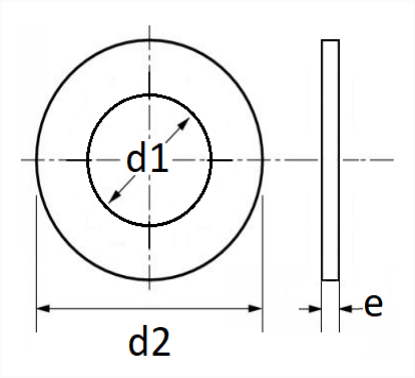

Technical informations	
d1	7 mm
d2	12.3 mm
e	2 mm

Materials
COPPER

Manufacturer correspondence*			
AUDI	03P130519	SEAT	03P130519

Manufacturer correspondence*			
SKODA	03P130519	VOLKSWAGEN	03P130519

* Non contractual information given as indication