1 Allée des Bouleaux -F-95110 SANNOIS
+33 (0)1 39 98 55 00
info@restagraf.com

NON-INSULATED FLAT FEMALE TERMINAL 6,35 x 0,8 mm (2,6 → 6 mm²)

Item code	Number of References	Number of pieces	Conditioning
6892	1	30	BAG
226892	1	10	BLISTER
306892	1	100	BOX

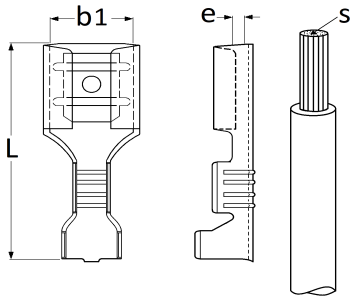

Technical informations	
L	19.8 mm
b1	6.35 mm
e	0.8 mm
s	2.6 → 6 mm²

Materials
BRASS