1 Allée des Bouleaux -F-95110 SANNOIS
+33 (0)1 39 98 55 00
info@restagraf.com

ARROWHEAD PLASTIC CABLE TIE 110 X 3 mm Ø 5,4 mm

Item code	Number of References	Number of pieces	Conditioning
1495	1	10	BAG

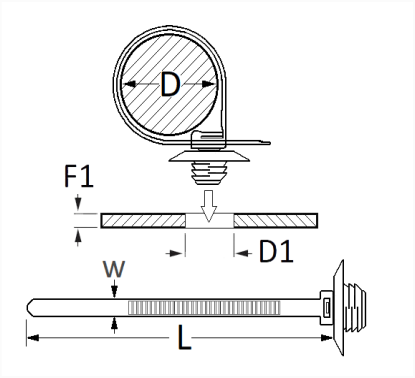

Technical informations	
L	110 mm
W	3.20 mm
D	2 → 20 mm
D1	5.40 mm
F1	0.6 → 1.8 mm

Materials
POLYAMIDE 66

Manufacturer correspondence*	
NISSAN	2422579900

* Non contractual information given as indication