1 Allée des Bouleaux -F-95110 SANNOIS
+33 (0)1 39 98 55 00
info@restagraf.com

SELF LOCKING FLANGE NUT M8-1.25 SPECIAL FOR EXHAUST

Item code	Number of References	Number of pieces	Conditioning
7291	1	5	BAG

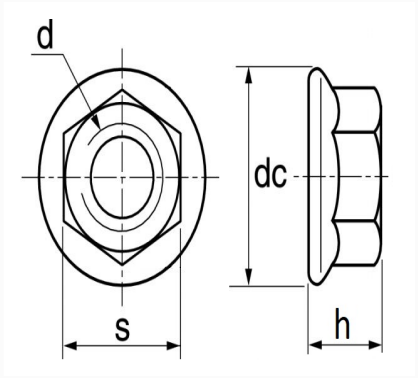

Technical informations	
s	10 mm
h	11.30 mm
d	M8 x 1.25
dc	19.60 mm

Materials
CLASS 10 STEEL

Manufacturer correspondence*	
RENAULT	7703034303

* Non contractual information given as indication