1 Allée des Bouleaux -F-95110 SANNOIS
+33 (0)1 39 98 55 00
info@restagraf.com

ROD CLIP Ø 3 mm DOOR LOCK

Item code	Number of References	Number of pieces	Conditioning
9967	1	6	BAG

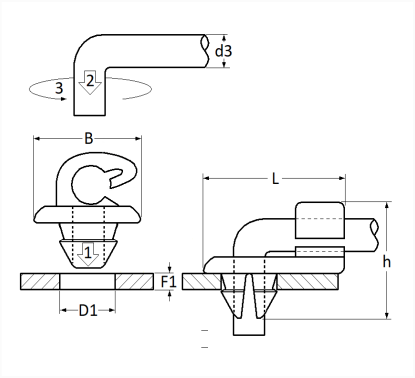

Technical informations	
L	13 mm
B	9 mm
h	11.2 mm
d3	3 mm
D1	5.8 mm
F1	2.2 mm

Materials
POLYAMIDE 66

Manufacturer correspondence*			
ALFA ROMEO	14578082	FIAT	14578082

Manufacturer correspondence*			
LANCIA	14578082	PEUGEOT / CITROËN	872711

* Non contractual information given as indication