1 Allée des Bouleaux -F-95110 SANNOIS
+33 (0)1 39 98 55 00
info@restagraf.com

BLADE FUSE MINI 32V 7,5A

Item code	Number of References	Number of pieces	Conditioning
306842	1	50	BOX
6842	1	10	BAG
226842	1	5	BLISTER

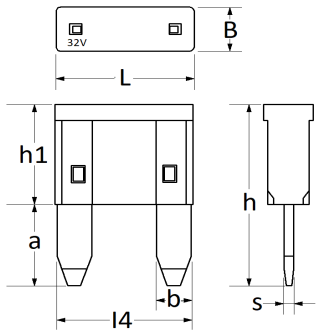

Technical informations	
L	11.1 mm
B	3.9 mm
h	16.2 mm
h1	8.9 mm
a	7.3 mm
b	2.8 mm
l4	10.8 mm
s	0.82 mm
Intens.	7.5 A

Materials
ZINC

Manufacturer correspondence*			
ALFA ROMEO	10395990	AUDI	N10261502

Manufacturer correspondence*			
B.M.W	61136917402	CHEVROLET - DAEWOO	12092080
CHEVROLET - DAEWOO	8215508075	CUPRA	N10261502
DAIHATSU	9004940055	DAIHATSU	9004940055000
DS Automobiles	6500R8	FIAT	10395990
FORD Engineering number	1L3T14A094EA	FORD Engineering number	955114526AA
FORD Finis	1557376	FORD Finis	4352852
HONDA	9820040750	IVECO	10395990
IVECO	16711990	JAGUAR	T2H36055
JAGUAR	XR824137	KIA	1898004814
LANCIA	10395990	LAND ROVER	LR003738
LAND ROVER	LR078008	MAZDA	997051207
MAZDA	DD1067M07	MERCEDES-BENZ	A4539820300
MERCEDES-BENZ	N000000004194	MERCEDES-BENZ	N000000007665
MERCEDES-BENZ	N000000007901	MERCEDES-BENZ	N000000008709
MITSUBISHI	MS810875	MITSUBISHI	MS810885
NISSAN	2431900QAA	NISSAN	24319C9907
OPEL (GM) Catalog number	1238374	OPEL (Stellantis)	6500R8
OPEL Part number	12092080	OPEL Part number	91153975
OPEL Part number	95524722	OPEL Part number	95525642
PEUGEOT / CITROËN	6500P9	PEUGEOT / CITROËN	6500R8
PEUGEOT / CITROËN	650499	PEUGEOT / CITROËN	6504C0
PEUGEOT / CITROËN	6545KG	PORSCHE	PAA102615A
PORSCHE	PAF102615	RENAULT	7700410573
RENAULT	7703297153	SAAB	24426654
SEAT	N10261502	SKODA	N10261502
SUBARU	82210FC007	TOYOTA	9008082020
TOYOTA	90118WA362	TOYOTA	9098209008
VOLKSWAGEN	N10261502	VOLVO	8688644

* Non contractual information given as indication