1 Allée des Bouleaux -F-95110 SANNOIS
+33 (0)1 39 98 55 00
info@restagraf.com

PEELED RIVET Ø 4 X 10 mm

Item code	Number of References	Number of pieces	Conditioning
4701	1	65	BAG
4906	1	250	BOX

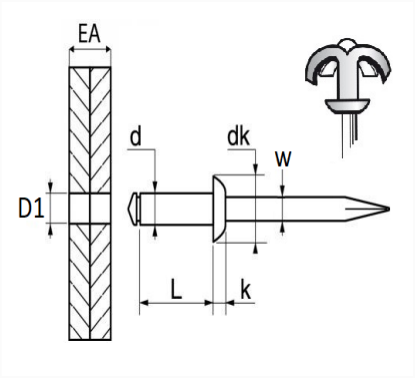

Technical informations	
d	4 mm
L	10 mm
dk	10 mm
k	1.5 mm
w	2.25 mm
EA	1.5 → 5 mm
D1	4.2 mm

Materials
ALUMINIUM ALLOY / STEEL STEM