1 Allée des Bouleaux -F-95110 SANNOIS
+33 (0)1 39 98 55 00
info@restagraf.com

PLASTIC RIVET Ø 6,2 mm

Item code	Number of References	Number of pieces	Conditioning
42601	1	100	BOX
1271	1	30	BAG
228178	1	5	BLISTER

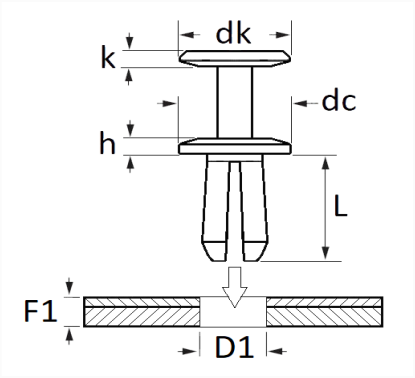

Technical informations	
dk	10 mm
k	2.6 mm
dc	12 mm
h	0.6 mm
L	10.9 mm
D1	6.2 mm
F1	3 → 5.8 mm

Materials
POLYAMIDE 66

Manufacturer correspondence*			
ALTERNATIVE TO FORD	W704320S300	ALTERNATIVE TO MERCEDES	A0009916640

Manufacturer correspondence*			
ALTERNATIVE TO MERCEDES	A6389840060	ALTERNATIVE TO VOLKSWAGEN	7L6868307
NISSAN	0155300QAB	OPEL (GM) Catalog number	4405737
OPEL (Stellantis)	6555LE	OPEL Part number	9120790
PEUGEOT / CITROËN	6555LE	PEUGEOT / CITROËN	6999A8
RENAULT	7703072236	RENAULT SAMSUNG MOTORS	324525
SUBSTITUTABLE FOR VOLKSWAGEN	7L6868307	VOLKSWAGEN	8Z0857784

* Non contractual information given as indication