Restagraf
1 Allée des Bouleaux -F-95110 SANNOIS
+33 (0)1 39 98 55 00
info@restagraf.com

PANEL CLIP DOOR TRIM

Mounts only with grommets part number 1338 or 10383 sold separately.



Item code	Number of References	Number of pieces	Conditioning
1404	1	20	BAG

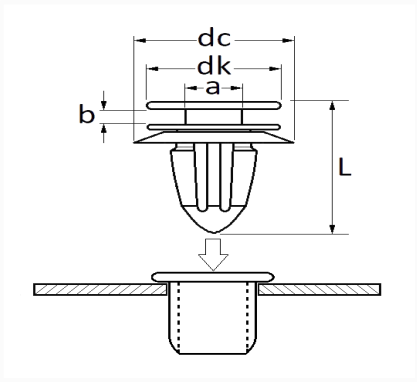

Technical informations	
dk	14 à 16 mm
dc	18 mm
b	2.8 mm
a	6 x 2 mm
L	21.2 mm

Materials
NYLON

Manufacturer correspondence*			
FIAT	82456516	PEUGEOT / CITROËN	9399W4

* Non contractual information given as indication