1 Allée des Bouleaux -F-95110 SANNOIS
+33 (0)1 39 98 55 00
info@restagraf.com

DRY SANDING PAPER P180 3M SÉRIE 618 PAINT MAKING

Rubbing down, smoothing. gain size : P180. Backing : paper gade B. Mineral : Silicon carbide.

Item code	Number of References	Number of pieces	Conditioning
882562	1	8	BAG
802562	1	25	BAG

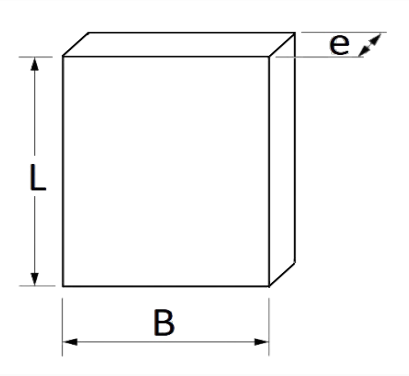

Technical informations	
L	280 mm
B	230 mm
e	0.18 mm