1 Allée des Bouleaux -F-95110 SANNOIS
+33 (0)1 39 98 55 00
info@restagraf.com

PLASTIC CABLE TIE 180 X 3,6 mm

Item code	Number of References	Number of pieces	Conditioning
555104	1	100	BAG

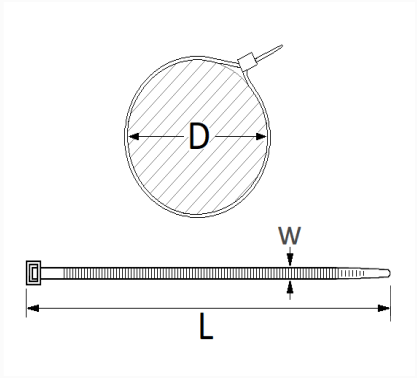

Technical informations	
L	180 mm
W	3.6 mm
D	2 → 44 mm

Materials
POLYAMIDE 66