1 Allée des Bouleaux -F-95110 SANNOIS
+33 (0)1 39 98 55 00
info@restagraf.com

2 POSITIONS SELF-STRIPPING CONNECTOR 0,3 → 1,5 mm²

Item code	Number of References	Number of pieces	Conditioning
306913	1	40	BOX
6913	1	15	BAG
226913	1	5	BLISTER

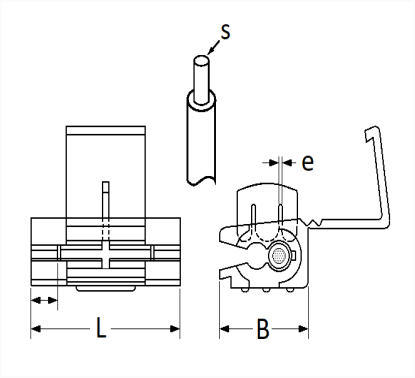

Technical informations	
L	20 mm
B	11.8 mm
e	0.43 mm
s	0.35 → 1.5 mm²