1 Allée des Bouleaux -F-95110 SANNOIS
+33 (0)1 39 98 55 00
info@restagraf.com

CONTINENTAL FUSE 5A

Item code	Number of References	Number of pieces	Conditioning
306880	1	50	BOX
6880	1	10	BAG

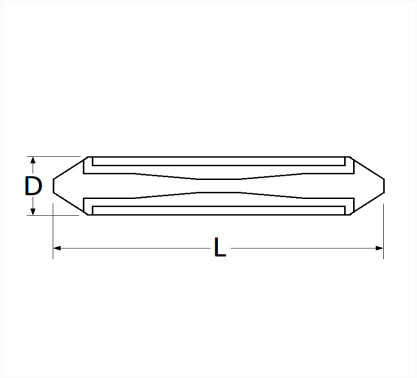

Technical informations	
L	25.7 mm
D	6 mm
Intens.	5 A

Manufacturer correspondence*			
B.M.W	61138760141	MERCEDES-BENZ	N072581005100
PEUGEOT / CITROËN	650441	PORSCHE	90017300690
PORSCHE	N0171211	RENAULT	0854898600

* Non contractual information given as indication