1 Allée des Bouleaux -F-95110 SANNOIS
+33 (0)1 39 98 55 00
info@restagraf.com

SIMPLE CRIMP MALE PRE-INSULATED FLAT TERMINAL 6,35 x 0,8 mm (1 → 2,5 mm²)

Item code	Number of References	Number of pieces	Conditioning
306608	1	100	BOX
6608	1	37	BAG
555117	1	150	BAG

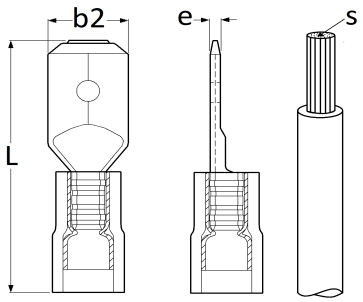

Technical informations	
L	22 mm
b2	6.35 mm
e	0.8 mm
s	1 → 2.5 mm²