1 Allée des Bouleaux -F-95110 SANNOIS
+33 (0)1 39 98 55 00
info@restagraf.com

NON-INSULATED FLAT FEMALE TERMINAL 2,8 X 0,5 mm (0,3 → 1 mm²)

Item code	Number of References	Number of pieces	Conditioning
226887	1	10	BLISTER
6887	1	30	BAG
306887	1	100	BOX

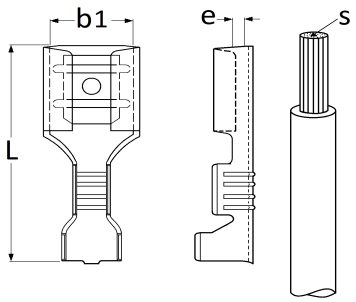

Technical informations	
L	14 mm
b1	2.8 mm
e	0.5 mm
s	0.3 → 1 mm²

Materials
BRASS