1 Allée des Bouleaux -F-95110 SANNOIS
+33 (0)1 39 98 55 00
info@restagraf.com

NON-INSULATED MALE CYLINDRICAL TERMINAL Ø 4 mm (1 → 2,5 mm²)

Item code	Number of References	Number of pieces	Conditioning
226886	1	10	BLISTER
6886	1	30	BAG
306886	1	100	BOX

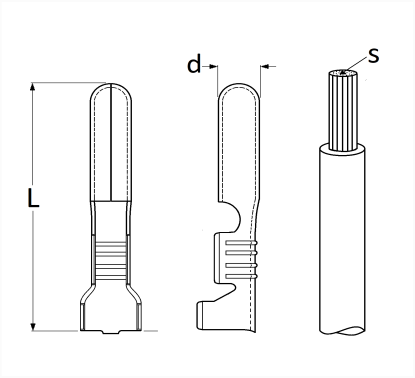

Technical informations	
L	23.3 mm
d	4 mm
s	1 → 2.5 mm²