Restagraf
1 Allée des Bouleaux -F-95110 SANNOIS
+33 (0)1 39 98 55 00
info@restagraf.com

STANDARD-FLACHSICHERUNG 35A



Item code	Number of References	Number of pieces	Conditioning
226879	1	5	BLISTER
6879	1	25	BEUTEL

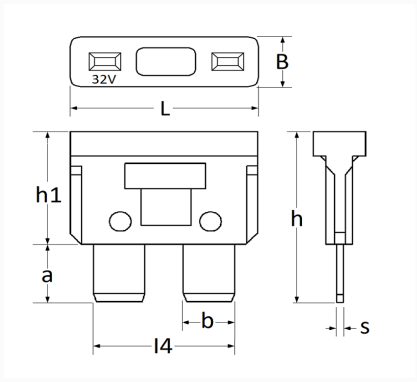

Technical informations	
L	19.1 mm
B	5.2 mm
h	19.3 mm
h1	12.8 mm
a	8.5 mm
b	5.2 mm
l4	14.2 mm
s	0.64 mm
Intens.	35 A

Manufacturer correspondence*			
AUDI	N01713122	LAND ROVER	LR078833
MERCEDES-BENZ	N910153000001	VOLKSWAGEN	N01713122
VOLVO	30682911		

* Non contractual information given as indication