1 Allée des Bouleaux -F-95110 SANNOIS
+33 (0)1 39 98 55 00
info@restagraf.com

RUNDSTECKER UNISOLIERT Ø 8 mm (3 → 6 MM²)



Item code	Number of References	Number of pieces	Conditioning
226816	1	10	BLISTER
6816	1	30	BEUTEL
306816	1	100	BEHÄLTER

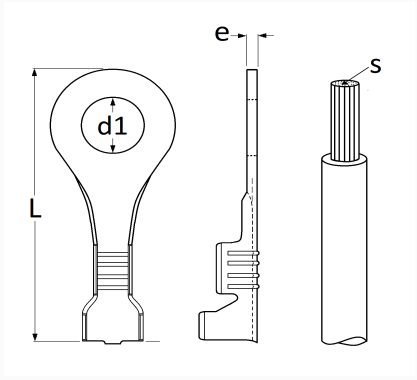

Technical informations	
L	26.2 mm
d1	8.2 mm
e	0.7 mm
s	3 → 6 mm²

Materials
MESSING