1 Allée des Bouleaux -F-95110 SANNOIS
+33 (0)1 39 98 55 00
info@restagraf.com

JAPANSE ZEKERING MANNELIJK TYPE B 140A

Item code	Number of References	Number of pieces	Conditioning
225183	1	1	

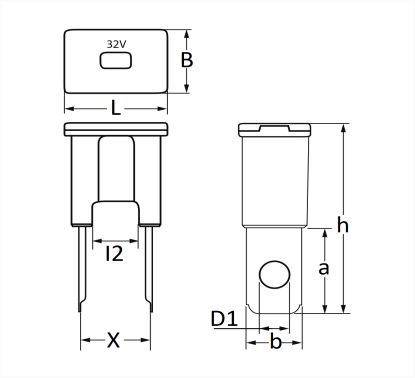

Technical informations	
L	22.2 mm
B	15.2 mm
h	45 mm
l2	10 mm
X	15 mm
D1	6.5 mm
b	12 mm
a	20.5 mm
Intens.	140 A

Manufacturer correspondence*			
HYUNDAI	1898004805	KIA	1898004805
MAZDA	DD1067S99	MITSUBISHI	MU840042
NISSAN	2437079920	TOYOTA	9098208286

* Non contractual information given as indication