1 Allée des Bouleaux -F-95110 SANNOIS
+33 (0)1 39 98 55 00
info@restagraf.com

AFDEKKING 82 X 45 mm GASPEDAAL

Item code	Number of References	Number of pieces	Conditioning
2707	1	1	

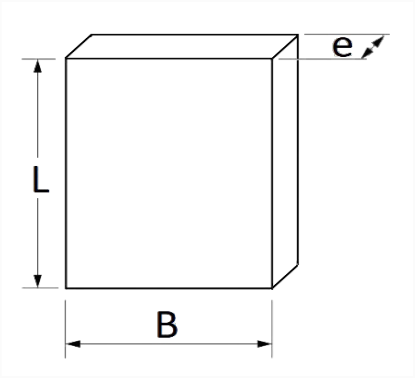

Technical informations	
L	82 mm
B	45 mm
e	12 mm

Materials
ETHYLEEN PROPYLEEN DIENE MONO.

Manufacturer correspondence*	
PEUGEOT / CITROËN	160407

* Non contractual information given as indication