1 Allée des Bouleaux -F-95110 SANNOIS
+33 (0)1 39 98 55 00
info@restagraf.com

INSULATED CRIMP BUTT SPLICE 1 → 2,5 mm²

Item code	Number of References	Number of pieces	Conditioning
225095	1	5	BLISTER
6612	1	30	BAG
306612	1	100	BOX

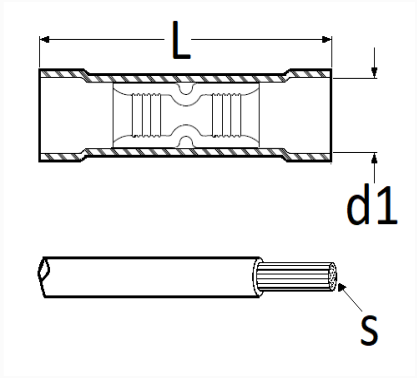

Technical informations	
L	25.5 mm
d1	5.5 mm
s	1 → 2.5 mm²