1 Allée des Bouleaux -F-95110 SANNOIS
+33 (0)1 39 98 55 00
info@restagraf.com

B TYPE MALE JAPANESE FUSE 100A

Item code	Number of References	Number of pieces	Conditioning
225069	1	1	BLISTER
17114	1	2	BAG

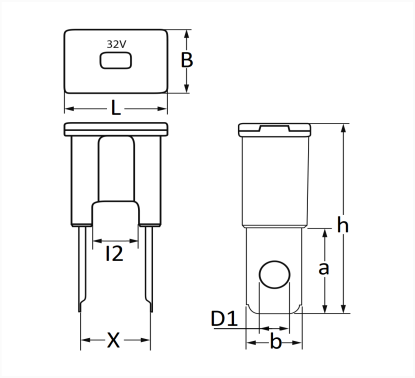

Technical informations	
L	22.2 mm
B	15.2 mm
h	45 mm
l2	10 mm
X	15 mm
D1	6.5 mm
b	12 mm
a	20.5 mm
Intens.	100 A

Manufacturer correspondence*			
HYUNDAI	9182322600	HYUNDAI	9182333600
KIA	1898006566	MAZDA	FC0167099
MITSUBISHI	MU840022	NISSAN	2437079910
NISSAN	2437079912	OPEL (GM) Catalog number	470838
OPEL Part number	9216628	TOYOTA	9098208246

Manufacturer correspondence*			
TOYOTA	9098208270	TOYOTA	9098208273

* Non contractual information given as indication