1 Allée des Bouleaux -F-95110 SANNOIS
+33 (0)1 39 98 55 00
info@restagraf.com

AS TYPE FEMALE JAPANESE FUSE 60A

Item code	Number of References	Number of pieces	Conditioning
225060	1	1	BLISTER
17105	1	2	BAG

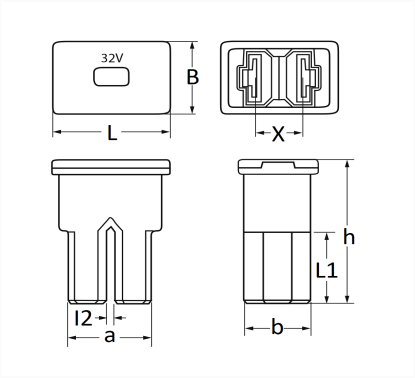

Technical informations	
L	22.2 mm
B	15 mm
X	9 mm
h	30 mm
a	15.7 mm
b	12.5 mm
l2	1.5 mm
L1	15.1 mm
Intens.	60 A

Manufacturer correspondence*			
CHEVROLET - DAEWOO	9609100060	DAIHATSU	9004982033
DAIHATSU	9004982033000	FORD Engineering number	91AG14A094EA
FORD Engineering number	XR8T14A094AA	FORD Finis	4238345
FORD Finis	6570394	MAZDA	1E0766763

Manufacturer correspondence*			
MAZDA	FB0167099	OPEL (GM) Catalog number	4302291
OPEL (GM) Catalog number	4702807	OPEL Part number	9195830
OPEL Part number	94468664	SUZUKI	0948160202
TOYOTA	9098208190	VOLVO	979010

* Non contractual information given as indication