1 Allée des Bouleaux -F-95110 SANNOIS
+33 (0)1 39 98 55 00
info@restagraf.com

PANEL CLIP DOOR AND INTERIOR TRIM

Item code	Number of References	Number of pieces	Conditioning
1333	1	8	BAG

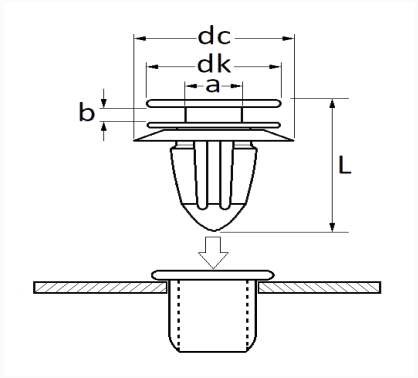

Technical informations	
dk	13.7 mm
dc	17 mm
b	2.4 mm
a	5 mm
L	35 mm

Materials
POLYACETAL COPOLYMER

Manufacturer correspondence*			
PEUGEOT / CITROËN	6999A1	PEUGEOT / CITROËN	96126454

* Non contractual information given as indication