1 Allée des Bouleaux -F-95110 SANNOIS
+33 (0)1 39 98 55 00
info@restagraf.com

POSITIVE BATTERY TERMINAL M6 (SPECIFIC FORD TYPE)

Item code	Number of References	Number of pieces	Conditioning
210621	1	1	BLISTER
10621	1	25	BOX

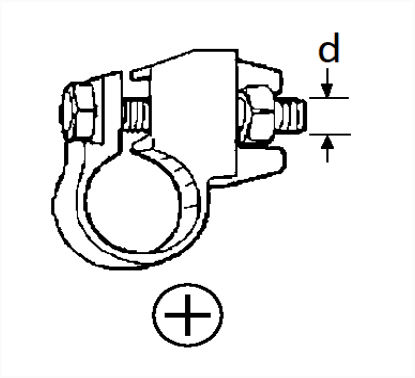

Technical informations	
d	6 mm