1 Allée des Bouleaux -F-95110 SANNOIS
+33 (0)1 39 98 55 00
info@restagraf.com

# NEGATIVE BATTERY TERMINAL FLAT SERIES

| Item code | Number of References | Number of pieces | Conditioning |
|---|---|---|---|
| 210287 | 1 | 1 | HANGING BOX |
| 10287 | 1 | 15 | BOX |

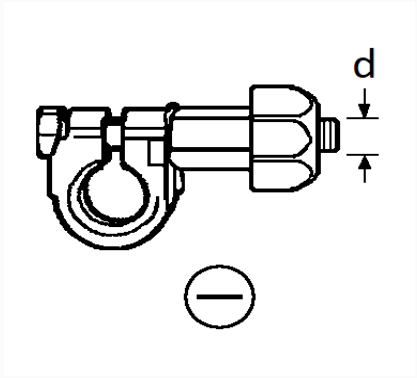


| Technical informations | |
|---|---|
| d | 8 mm |
| | |
| | |
| | |
| | |
| | |
| | |
| | |
| | |
| | |