1 Allée des Bouleaux -F-95110 SANNOIS
+33 (0)1 39 98 55 00
info@restagraf.com

ANGLE BATTERY TERMINAL 35 mm² FOR NEGATIVE TERMINAL

Item code	Number of References	Number of pieces	Conditioning
210279	1	1	BLISTER
10279	1	25	BOX
555113	1	12	BAG

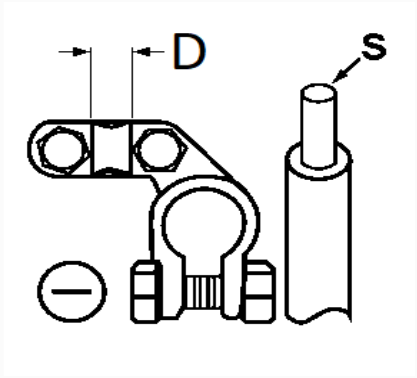

Technical informations	
D	13 mm
s	35 mm²

Materials
BRASS