1 Allée des Bouleaux -F-95110 SANNOIS
+33 (0)1 39 98 55 00
info@restagraf.com

PEDAL COVER 110 X 65 mm BRAKE

Item code	Number of References	Number of pieces	Conditioning
2706	1	1	BAG

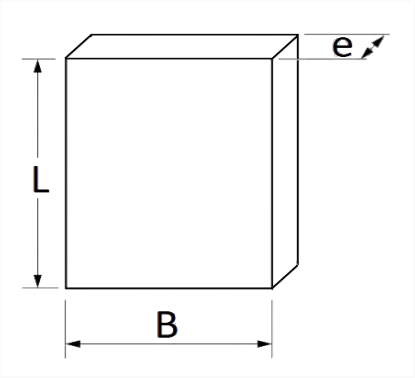

Technical informations	
L	110 mm
B	65 mm
e	10 mm

Materials
ETHYLENE PROPYLENE DIENE MONO.

Manufacturer correspondence*	
RENAULT	7700839601

* Non contractual information given as indication