1 Allée des Bouleaux -F-95110 SANNOIS
+33 (0)1 39 98 55 00
info@restagraf.com

WHITE GROOVED RIVET Ø 4 X 20 mm

Item code	Number of References	Number of pieces	Conditioning
4734	1	30	BAG

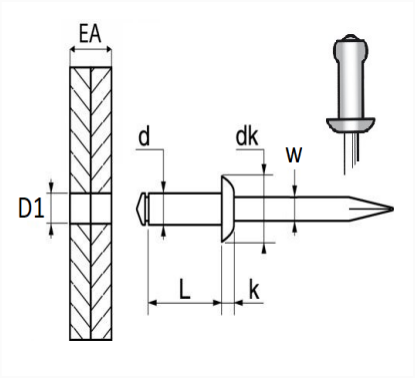

Technical informations	
d	4 mm
L	20 mm
dk	8 mm
k	1.7 mm
w	2.25 mm
EA	12 → 16 mm
D1	4.2 → 5 mm

Materials
ALUMINIUM ALLOY / STEEL STEM